THR-025T

General Description

Through hole slip rings are slip ring with through bore, this series iare designed for being installed with flange on a sleeve bracket, also they totally meet with continuous transmission of power and/ or signal under 360 degree unrestrained rotations. This kind of slip ring applies the best advanced fiber brush technology and precious metal multi-contacting, low noise, low contact pressure and maintenance free. Our standard through hole size could be from 12.7mm- 190mm are optional, the standard circuits are 6 rings, 12 rings, 18 rings and 24 rings are available, the current can be alternative from 2A-800A. Standardized & modularized design, we could fully customize the best suitable product according to the special requirement of customer.

Features:

1.Modular design & compact design
2.Transmit various analog and digital signal
3.Low wear and long work life time
4.Compatible with data bus protocols
5.360 degree continuous rotary power transmission or data signal

Option:

1.Current & Voltage
2.Circuits
3.Inner diameter, outer diameter and length
4.Work speed
5.Housing material and color
6.Protection degree
7.Lead wire exit direction
8.Lead wire length
9.Connector type
10.Signal and power transmitted single or together

Application

1.Radar, antenna, robotics
2.Turn table, rotary sensor
3.Engineering machinery equipment, cable wheel, test machine
4.Packing machine, medical equipment
5.Handling process control equipment
6.Military equipment
7.Wind turbine generator
8.Emergency lighting machine, exhibition/display equipment

BARLINTIMES
SHENZHEN BARLIN TIMES TECHNOLOGY CO.,LTD
www.barlintimes.com · sales@barlintimes.com · +86-755-2561-2919

Specification:

Specification	
Circuits	1-24 circuits
Work Speed	0-500RPM
Work Temperature	-20℃ - +60℃
Work Humidity	60%RH or higher
Voltage Rating	380VAC/DC
Current Rating	5A/10A/15A
Dielectric Strength	≥1000VAC@50Hz between each circuit
Insulation Resistance	1000MΩ@500VDC
Electrical Noise	1mΩ Min
Contact Materials	Precious metal
Lead Wire Size	Teflon® UL
Lead Wire Length	Standard 300mm
Housing Materials	Aluminum alloy
Torque	≤9.25 gm (for reference）
Protection	IP54 or higher

Length of Slip Ring(mm)				
Current	6 circuits	12 circuits	18 circuits	24 circuits
5A	43.5	62.7	81.9	101.1
10A	47.7	71.7	94.5	117.9
15A	52.5	80.7	108.9	137.1
Remarks: More bigger current or circuits, please feel free to contact with us.				

Drawing:

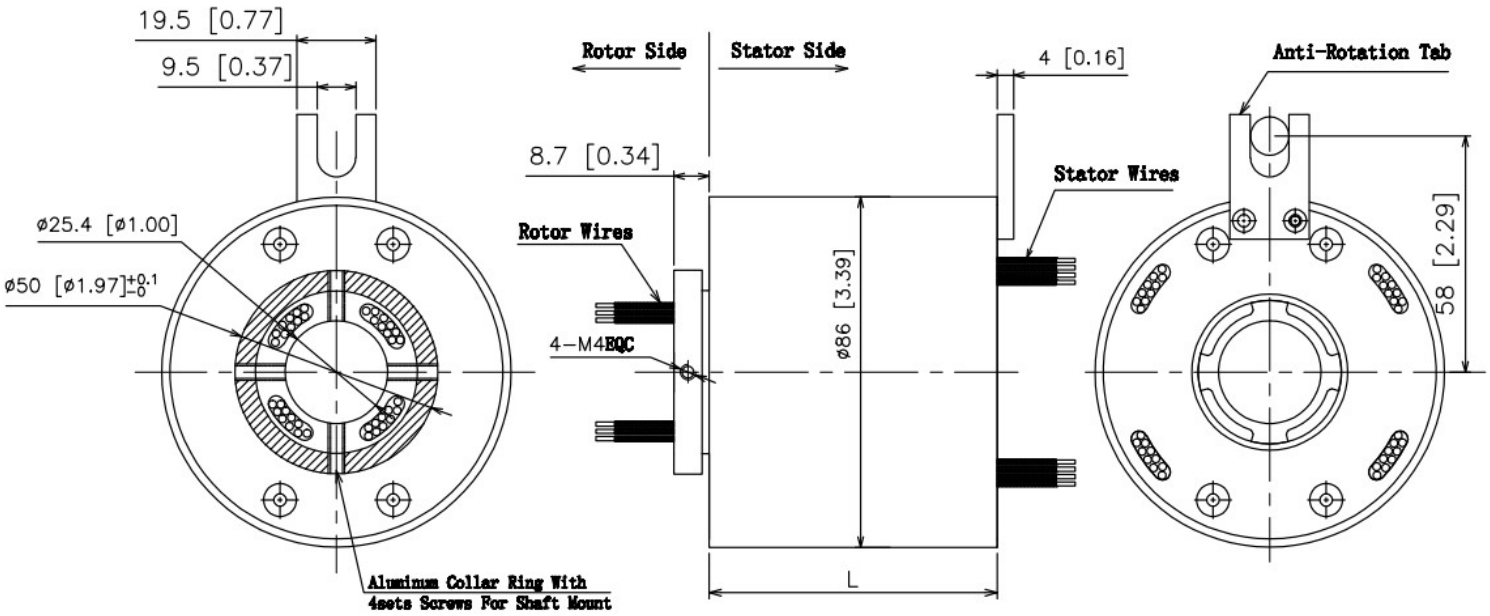

If you have specific customized requirement, please feel free to consult us so that our sales engineer could recommend the most suitable product to you for you reference.

BARLINTIMES
SHENZHEN BARLIN TIMES TECHNOLOGY CO.,LTD
www.barlintimes.com · sales@barlintimes.com · +86-755-2561-2919